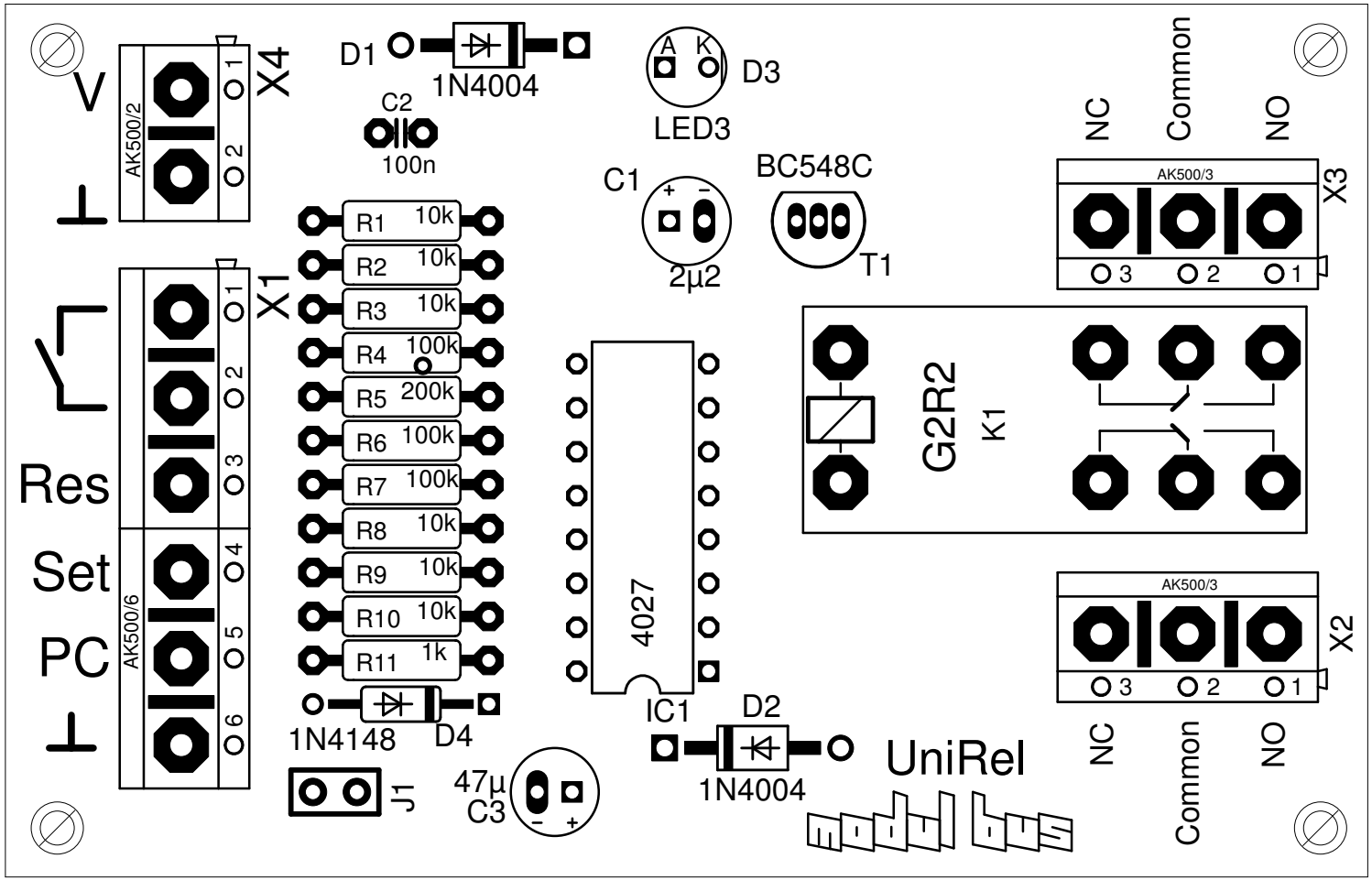
V
AK500/2
X4
D1
1N4004
C2
100n
A K
D3
LED3
C1
2µ2
BC548C
T1
NC
Common
NO
AK500/3
X3
R1 10k
R2 10k
R3 10k
R4 100k
R5 200k
R6 100k
R7 100k
R8 10k
R9 10k
R10 10k
R11 1k
X1
Res
Set
PC
AK500/6
G2R2
K1
4027
IC1
D2
1N4004
1N4148
D4
J1
47µ
C3
UniRel
AK500/3
X2
NC
Common
NO